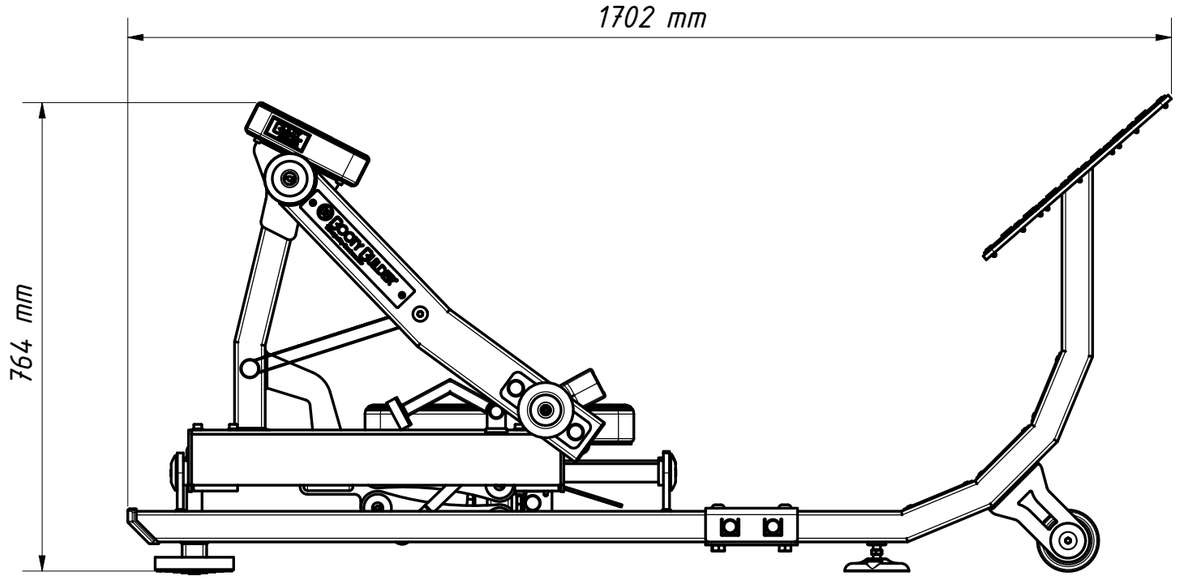
1702 mm
764 mm

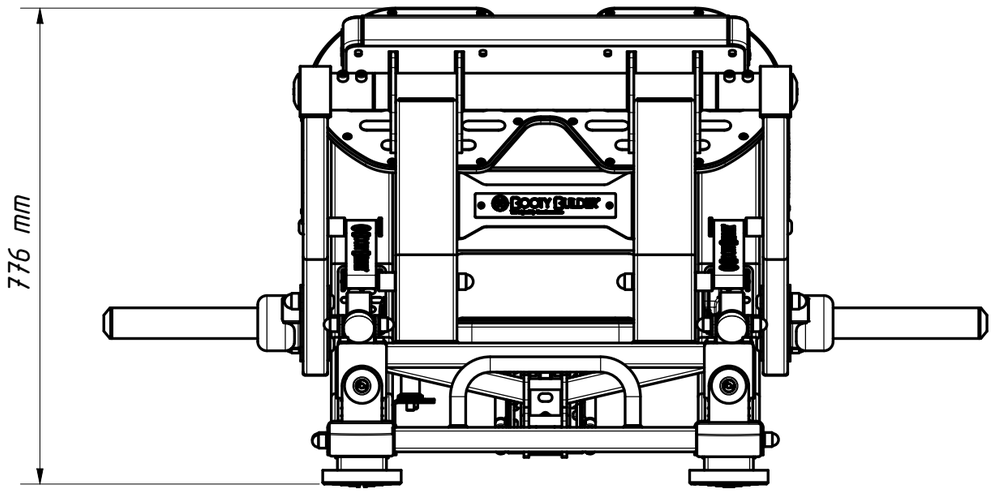
776 mm

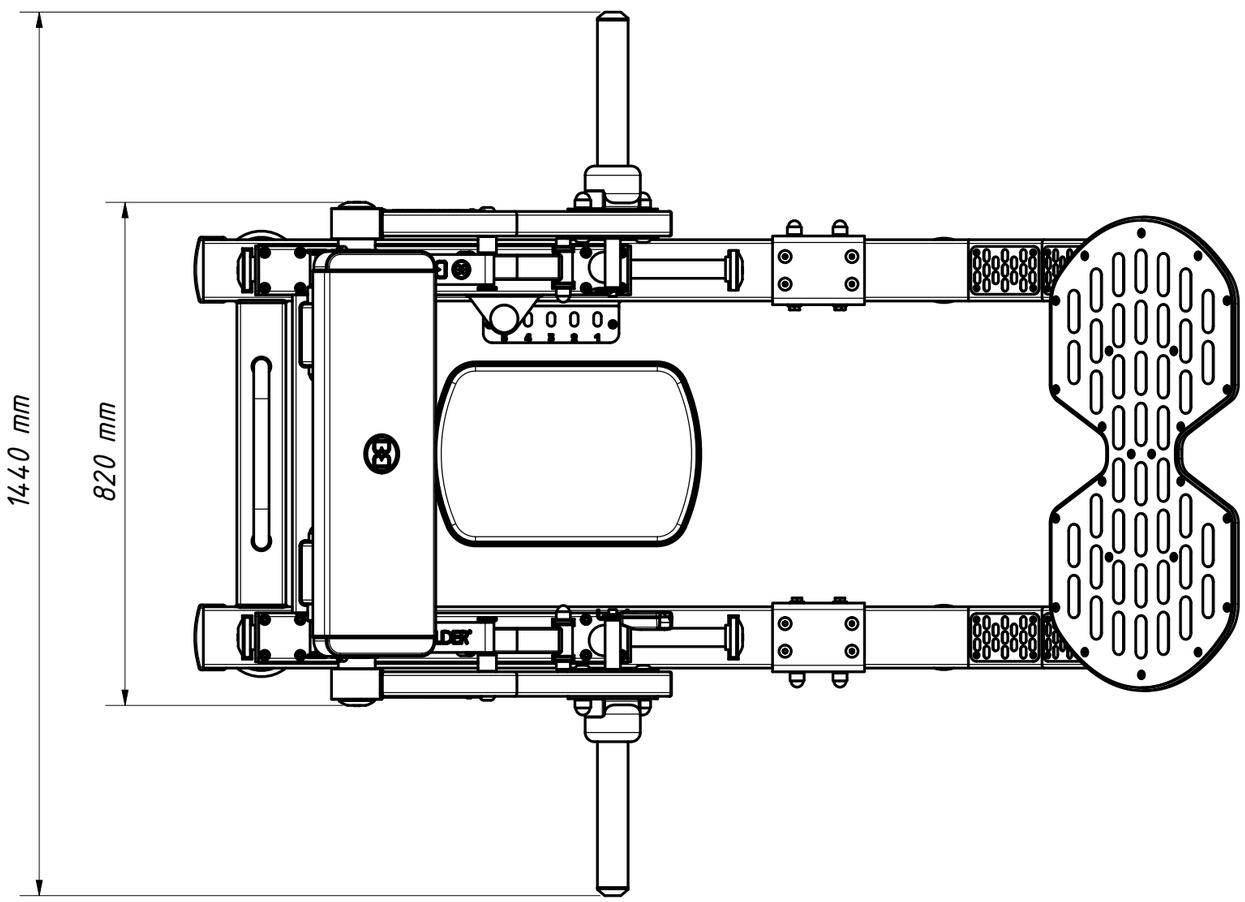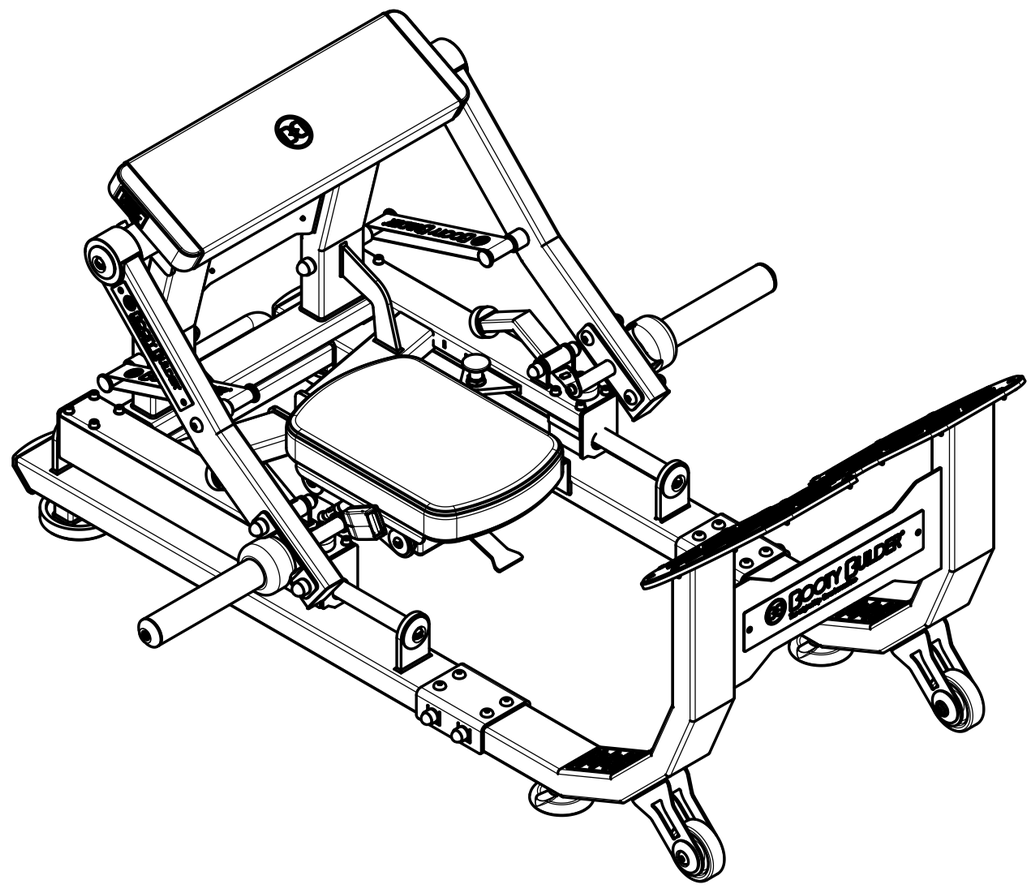
1440 mm
820 mm